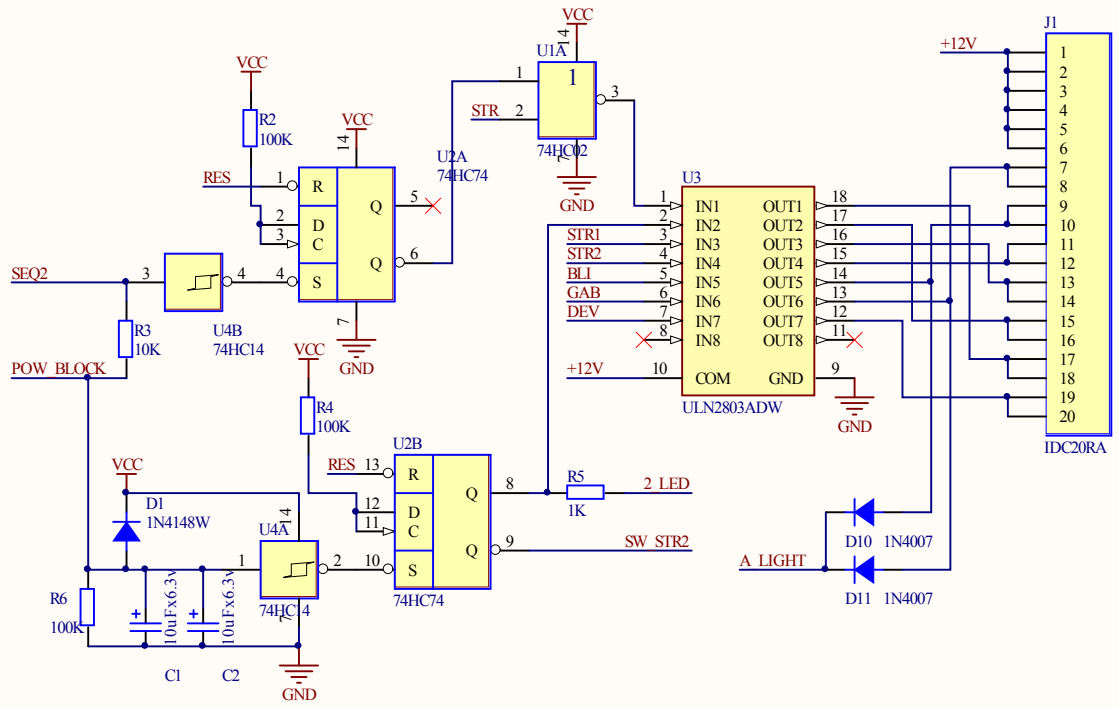

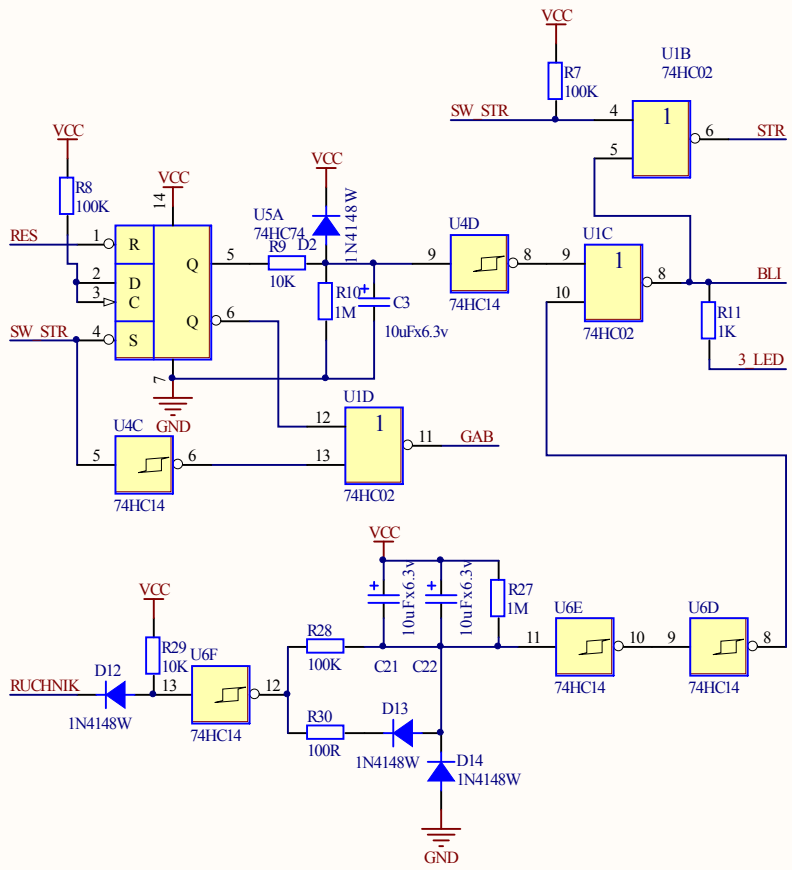

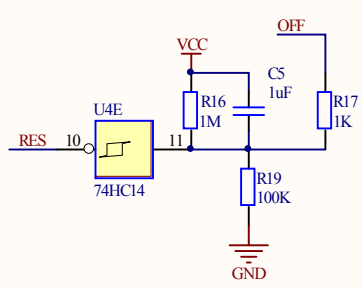

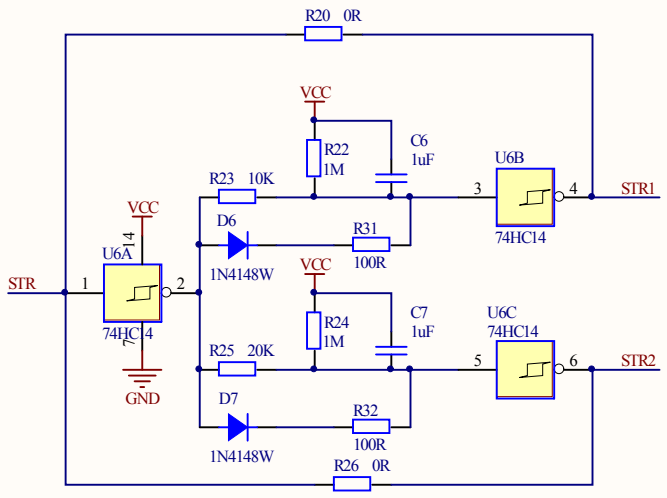

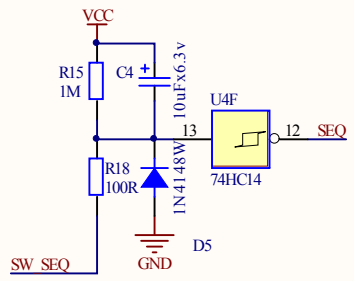

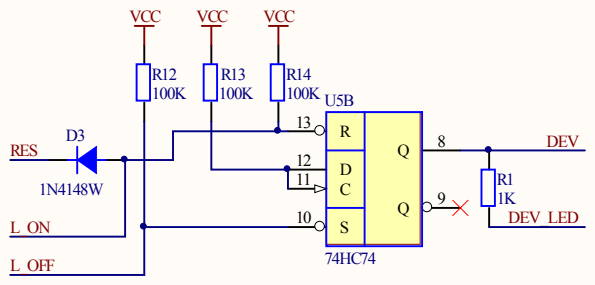

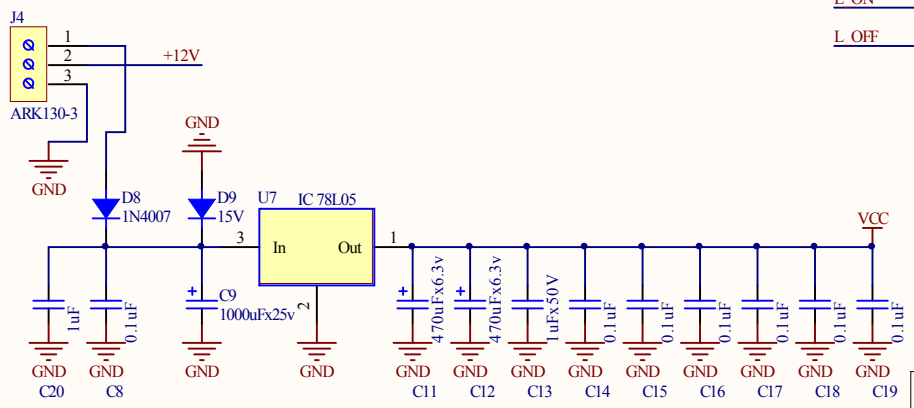

Title		
Size A3	Number	Revision
Date: 5/20/2009	Sheet of	
File: D:\Shemy\..\AUTO Zamok Zaziganija plata.SchDoc	Drawn By:	